PSC-ID-x-CM Series | Ceiling Mount Occupancy Sensor

Basic Features

- Line voltage version: 120-277VAC, 60Hz
- Low voltage version: 24VDC, requires separate class 2 power supply
- PIR sensor range: 360º coverage up to 1600ft² (dia. 44ft)
- Ultrasonic sensor range: 360º coverage up to 900ft² (30ft x 30ft)
- Time-delay and sensitivity controls
- LED indicator light
- UL/cUL listed: E350121, E341446

For indoor use only

c UL us

E350121, E341446

Applications

PIR Sensor

Sensor models that rely on passive infrared (PIR) detection work best in areas with clear line of sight of all occupants.

Dual Tech

Dual technology models, which use both PIR and ultrasonic detection methods, can provide improved performance in areas where a PIR sensor alone will not suffice. For example, areas with partitions that obscure line of sight to some occupants, may turn lights off when the room is occupied. Ultrasonic waves can see around such obstacles.

See “Placement Guide” on page 8 for more information.

PSC-ID-x-CM series ceiling mount occupancy sensors are designed for indoor applications such as break rooms, conference rooms, and open offices. Optimal ceiling mounting height is 8-10 ft.

PSC-ID-x-CM series sensors are available as line voltage or as a low voltage models. with separate power supply.

Low voltage version has more features and may be more useful for retrofitting areas with ceilings that are easy to access. PSC-AC-PP-100 power packs can power up to 6 low voltage sensors in parallel.

Sensor Operation

PSC-ID-x-CM series sensors are designed to turn loads on/off automatically. They are a proven and cost-effective way to save energy.

The PIR sensor provides 360º coverage up to approximately 1600ft² (dia. 44ft). 360º coverage up to 900ft² (30ft x 30ft).

Settings can be easily adjusted in the field by the installer or end user. Simply remove the front cover using a small slotted screwdriver to gain access. Controls will vary by model, but will consist of a series of dip switches and trimpots.

How to Order

Model No.	Description	Input Voltage
PSC-ID-I-CM-301	Low Voltage Ceiling Mount PIR Occupancy Sensor	24VDC
PSC-ID-D-CM-301A	Low Voltage Ceiling Mount Dual Tech Occupancy/Vacancy Sensor	24VDC

Summary	
Sensor Type	PIR ceiling mount
Input Voltage	24VDC
Power Consumption	9mA
AC to DC Power Supply	PSC-AC-PP-100 class 2 power pack
Max Load (Ballast)*	800VA @ 120VAC, 1600VA @ 277VAC
Max Load (Motor)*	1/4 hp @ 120VAC
Max Sensor Range	dia. 44ft / 1600 ft² / 360° coverage
Time Delay	5 sec to 30 min
Operating Temperature	-0° to 55°C
Storage Temperature	-10° to 60°C
Relative Humidity	95% non-condensing
Mounting	Ceiling mount
Color	White
Warranty	5 years
Certifications	UL/cUL listed power pack

* Performance is similar to the line voltage version.

Physical Dimensions

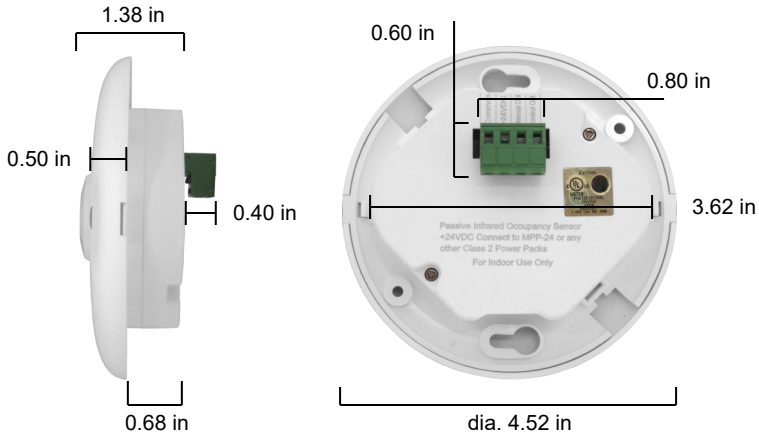

Weight: 6 oz

Wiring Diagram

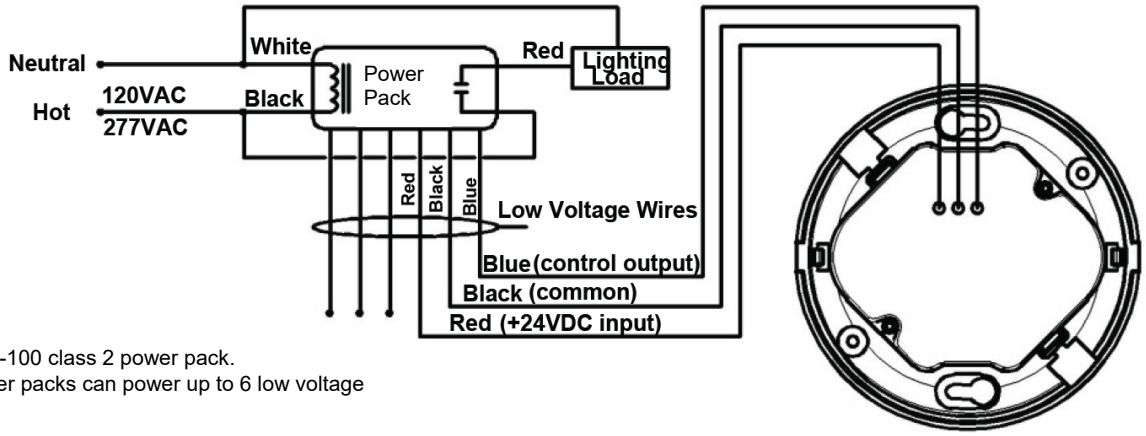

Standard Wiring:
Red (+24VDC Input)
Black (Common)
Blue (Control Output)

- Requires PSC-AC-PP-100 class 2 power pack.
- PSC-AC-PP-100 power packs can power up to 6 low voltage sensors in parallel.

Detection Area

Drawings not to scale.

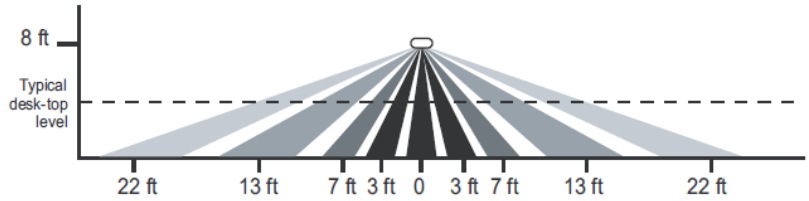

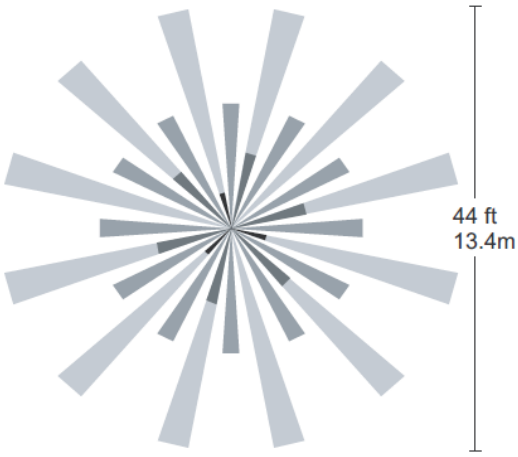

- Optimal mounting height is 8-10ft.
- Sensor range and detection area will vary depending on mounting height and obstacles such as furniture or partitions. See “Placement Guide” on page 12 for more information.

Settings Adjustment

The PSC-ID-I-CM-301 is factory preset to allow for quick installation right out of the box for most applications. To make adjustments, open the front cover with a small slotted screwdriver. You will see a set of 9 dip switches and a light level adjustment trimpot.

Sensitivity: Switch 1

50%: sensor range is set to approximately half the widest range. Sensitivity to minor motion is increased within a smaller detection area.
100%: sensor range is set to maximum. Sensitivity to minor motion is decreased.

Time Delay: Switches 2, 3, 4

The sensor will hold lights on as long as occupancy is detected. The time delay countdown starts when no motion is detected. After no motion is detected for the length of the time delay the sensor will turn the lights off. The length of the time delay can be a fixed time set by the user or it can be variable using the AutoSet feature.

AutoSet records occupancy patterns and uses this history to choose an optimal time delay from 5 seconds to 30 minutes. AutoSet behavior starts immediately and is refined continually as history is collected.

Walk-through Mode: Switch 5

This feature is operative only when the sensor time delay is set to 5 minutes or more. After motion is initially detected, the sensor will turn lights on. If no motion is detected beyond 30 seconds (such as when a person walks through an area) it will turn lights off automatically after another 2.5 minutes (3 minutes total) have elapsed. If motion is detected for longer than 3 minutes then the fixed time delay applies.

Vacancy Mode: Switch 6

This feature affects how a manual switch connected to the sensor will behave. When enabled the unit acts as a vacancy sensor. When disabled the unit acts as an occupancy sensor with manual override.

Vacancy enabled: requires users to manually turn lights on, but will automatically turn lights off when no motion is detected.

Vacancy disabled: automatically turns lights on when motion is detected or lights are manually switched on and turns lights off automatically when no motion is detected. The manual switch will change the relay to the opposite state, overriding other inputs. When lights are off, the manual switch turns lights on. When lights are already on, the manual switch turns the lights off and keeps them off as long as the sensor continues to detect motion. Five minutes after the last occupancy detection, the lights stay off and the sensor will revert back to its normal operating mode (i.e., the manual switch will turn lights on).

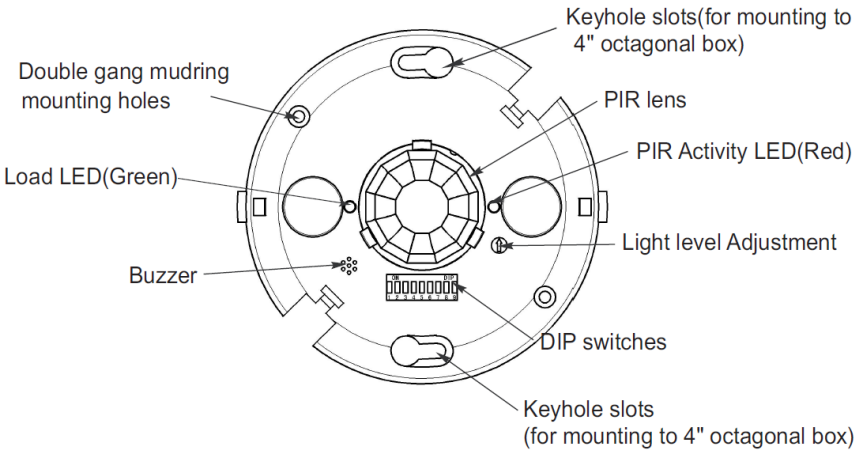

Sensitivity	1
50%	↓
100%	↑ ◀

Walk Through	5
Disabled	↓ ◀
Enabled	↑

Vacancy	6
Disabled	↓ ◀
Enabled	↑

Time Delay	2	3	4
5 Sec/Autoset	↓	↓	↓ ◀
30 Seconds	↓	↓	↑
5 Minutes	↓	↑	↓
10 Minutes	↓	↑	↑
15 Minutes	↑	↓	↓
20 Minutes	↑	↓	↑
25 Minutes	↑	↑	↓
30 Minutes	↑	↑	↑

↓=OFF ↑=ON ◀=Factory Setting

Audible Alert	7
Disabled	↓ ◀
Enabled	↑

Visible Alert	8
Disabled	↓
Enabled	↑ ◀

Hold ON	9
Disabled	↓ ◀
Enabled	↑

Audible Alert: Switch 7

When this feature is enabled you will hear a "tick" sound from the buzzer to indicate that the time delay has expired.

Visible Alert: Switch 8

When this feature is enabled the LED indicator light will flash 1 minute before the time delay expires.

Hold ON: Switch 9

This feature will override all sensor functions and hold the load ON. Both the green and red LED indicator lights will stay on for the duration of the override.

Notes:

There is a 40-second warm-up period when power is first applied to the sensor.

Before making adjustments, make sure office furniture is installed, lighting circuits are turned on, and HVAC systems are turned on. VAV systems should be set to their highest airflow.

PSC-ID-D-CM-301A

Summary	
Sensor Type	Dual tech (PIR / Ultrasonic) ceiling mount
Input Voltage	24VDC
Power Consumption	20mA
AC to DC Power Supply	PSC-AC-PP-100 class 2 power pack
Max Load (Ballast)*	800VA @ 120VAC, 1600VA @ 277VAC
Max Load (Motor)*	1/4 hp @ 120VAC
PIR Sensor Range	dia. 44ft / 1600 ft² / 360° coverage
Ultrasonic Sensor Range	30ft x 30ft / 900 ft² / 360° coverage
Time Delay	5 sec to 30 min
Operating Temperature	-0° to 55°C
Storage Temperature	-10° to 60°C
Relative Humidity	95% non-condensing
Mounting	Ceiling mount
Color	White
Warranty	5 years
Certifications	UL/cUL listed power pack

* Performance is similar to the line voltage version.

Physical Dimensions

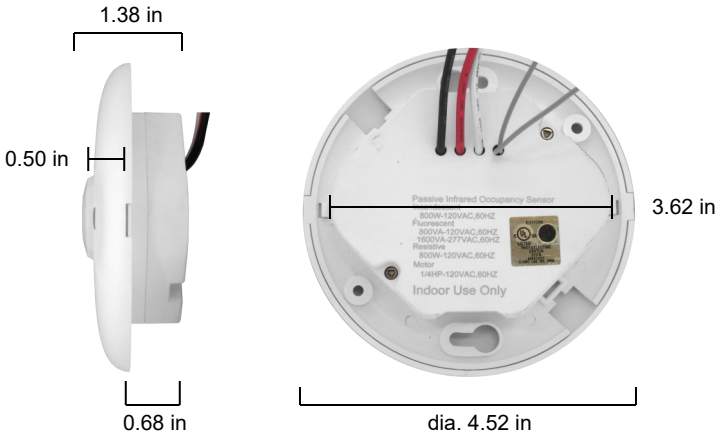

Weight: 6 oz

Wiring Diagram

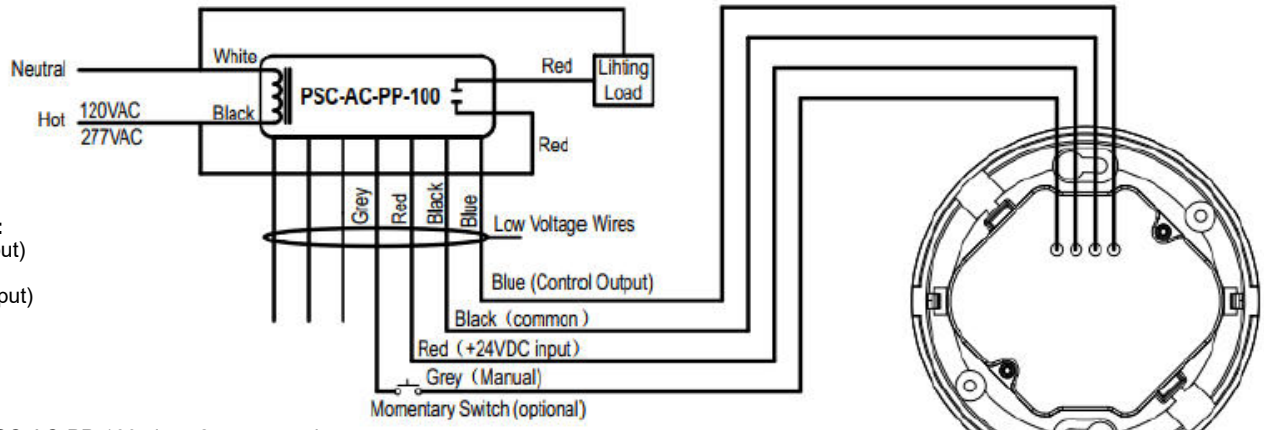

Standard Wiring:
Red (+24VDC Input)
Black (Common)
Blue (Control Output)
Grey (Manual)

- Requires PSC-AC-PP-100 class 2 power pack.
- PSC-AC-PP-100 power packs can power up to 6 low voltage sensors in parallel.

Detection Area

Drawings not to scale.

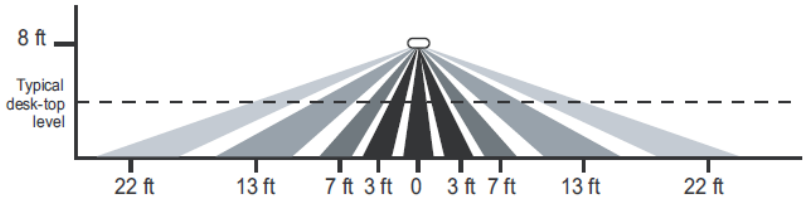

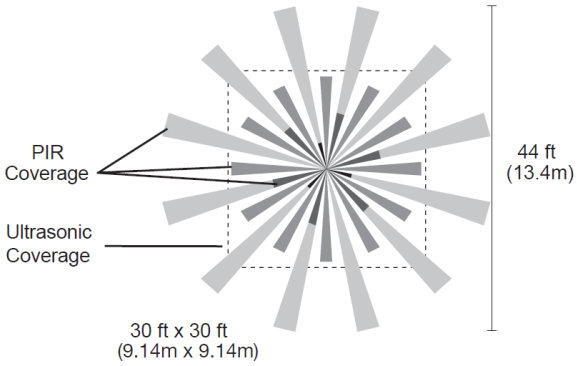

- Optimal mounting height is 8-10ft.
- Sensor range and detection area will vary depending on mounting height and obstacles such as furniture or partitions. See “Placement Guide” on page 12 for more information.

Settings Adjustment

The PSC-ID-D-CM-301/A is factory preset to allow for quick installation right out of the box for most applications. To make adjustments, remove the front cover with a small slotted screwdriver. You will see a set of 8 dip switches, an ultrasonic sensitivity adjustment trimpot, and a light level adjustment trimpot.

PIR Sensitivity: Switch 1

50%: sensor range is set to approximately half the widest range. Sensitivity to minor motion is increased within a smaller detection area.

100%: sensor range is set to maximum. Sensitivity to minor motion is decreased.

Trigger Mode: Switches 2, 3, 4

The sensor has 8 different trigger options that can be applied by adjusting dipswitches 2, 3, and 4.

Both: requires motion detection by the PIR and Ultrasonic sensor to trigger an event.

Either: requires motion detection by only one sensor (PIR or Ultrasonic) to trigger an event.

PIR: requires motion detection by the PIR sensor to trigger an event. Output signal from the Ultrasonic sensor is ignored.

Ultrasonic: requires motion detection by the ultrasonic sensor to trigger an event. Output signal from the PIR sensor is ignored.

Vacancy: manual On through a momentary switch, automatic Off
after set time delay.

Time Delay Adjustment: Switches 5, 6, 7

The sensor will hold lights on as long as occupancy is detected. The time delay countdown starts when no motion is detected. After no motion is detected for the length of the time delay the sensor will turn the lights off. The length of the time delay can be a fixed time set by the user. Time range is between 5 seconds and 30 minutes.

Override: Switch 8

To override all sensor functions and disable the sensor unit, set dipswitch 8 to the ON position.

Ultrasonic Sensitivity Adjustment

Use a small slotted screwdriver to turn the trimpot. Min (-) setting is best for smaller areas and near doorways or heat sources to avoid false triggering. Max (+) setting is best for larger open areas.

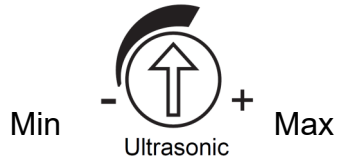

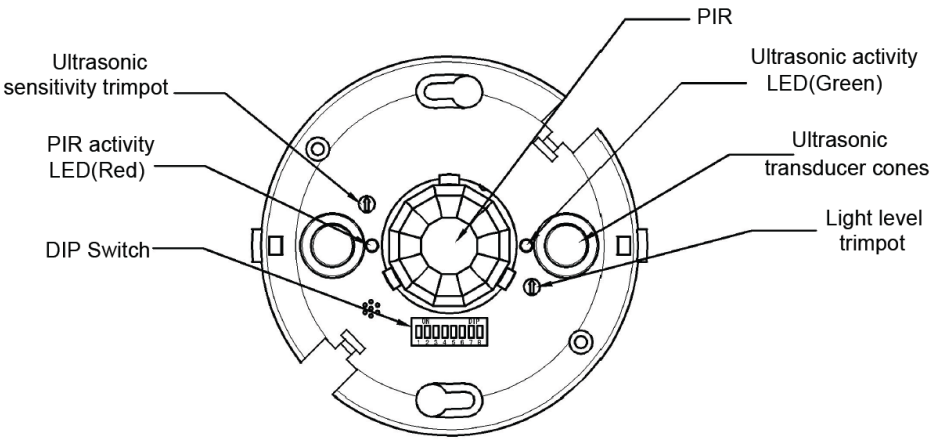

PIR Sensitivity	1
50%	↓
100%	↑ ◀

Trigger Mode	Initial Trigger	Maintain Load Output	2	3	4
Option 1	Both	Either	↓	↓	↓ ◀
Option 2	Either	Either	↓	↓	↑
Option 3	PIR	Either	↓	↑	↓
Option 4	PIR	PIR	↓	↑	↑
Option 5	Ultrasonic	Ultrasonic	↑	↓	↓
Option 6	Both	Both	↑	↓	↑
Option 7	Vacancy	Either	↑	↑	↓
Option 8	Vacancy	Both	↑	↑	↑

Time Delay	5	6	7
5 Sec/Autoset	↓	↓	↓ ◀
30 Seconds	↓	↓	↑
5 Minutes	↓	↑	↓
10 Minutes	↓	↑	↑
15 Minutes	↑	↓	↓
20 Minutes	↑	↓	↑
25 Minutes	↑	↑	↓
30 Minutes	↑	↑	↑

Override	8
Disabled	↓ ◀
Enabled	↑

↓=OFF ↑=ON ◀=Factory Setting

Additional Notes:

There is a 40-second warm-up period when power is first applied to the sensor.

Before making adjustments, make sure office furniture is installed, lighting circuits are turned on, and HVAC systems are turned on. VAV (variable air volume) systems should be set to their highest airflow.

Summary	
Product Type	Class 2 output power supply
Input Voltage	120-277VAC, 50/60Hz
Output	24VDC, 150mA (w/ relay connected)
Max Load (Ballast)	20A @ 120-277VAC
Max Load (Incandescent)	20A @ 120VAC
Max Load (motor)	1hp @ 120/240VAC
Max No. of Sensors	Controls up to 6 sensors in parallel
Operating Temperature	0° to 55°C
Storage Temperature	-10° to 60°C
Relative Humidity	95% non-condensing
Mounting	Fixture or J-box mount, 0.5 inch knockout
Color	White
Warranty	5 years
Certifications	UL 244A Plenum rated
	UL 94V-0 case
	UL/cUL listed: E341446

Physical Dimensions

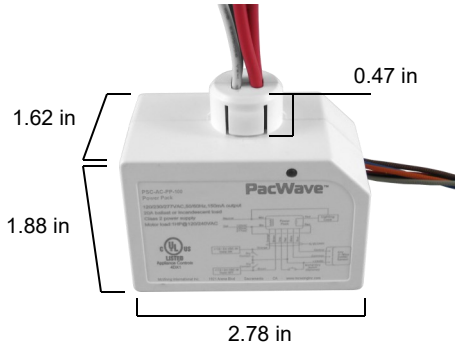

Weight: 4.3 oz

Basic Wiring Diagram (single load)

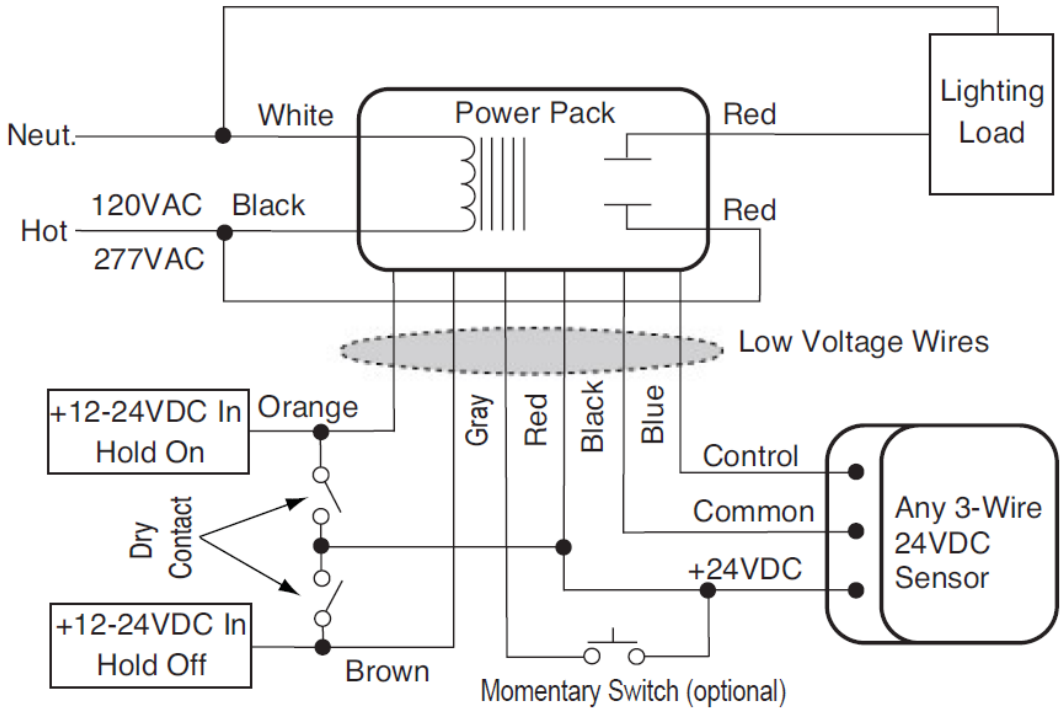

Manual Switch Wiring & Operation

Manual ON/OFF (Grey)

This input is for low voltage manual switch. Applying 12-24VDC to manual input changes the relay to the opposite state. It overrides Control ON, Hold ON, and Hold OFF inputs.

When the load is turned off using the manual switch, the power pack will not turn the load back on until after the sensor time delay expires. Operating the manual switch before the sensor time delay expires turns the load on.

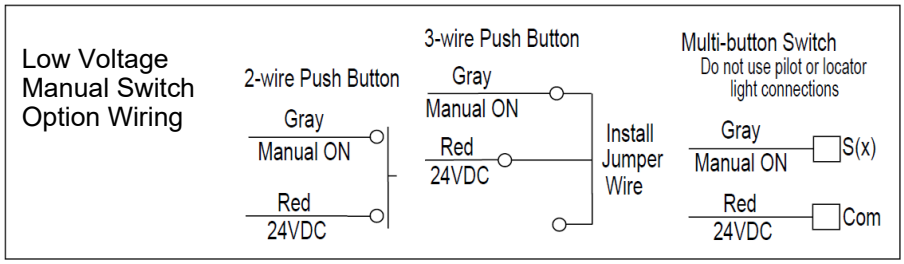

Wiring Diagram (multiple loads w/ relay)

The load can be automatically turned on or off using an occupancy sensor input, a timer, panel or BAS input, or manually from an optional low voltage momentary switch.

Low Voltage Inputs

Four +12-24VDC input wires are provided to control the load relay. The inputs may be used in combination or individually, depending on the needs of the application.

Control ON (Blue)

This input is intended for occupancy sensor input. Applying 12-24VDC closes the relay. Remove the voltage and the relay opens if no other input is holding it closed.

Hold ON (Orange)

This input is intended for timer or panel input. Applying 12-24VDC closes the relay. Remove the voltage and the relay opens if no other input is holding it closed. It overrides Control ON input.

Hold OFF (Brown)

This input is used for timers, panels, BAS or load shed input. Applying 12-24VDC opens the relay. Remove the voltage and the relay can accept any other input. It overrides Control ON and Hold ON inputs.

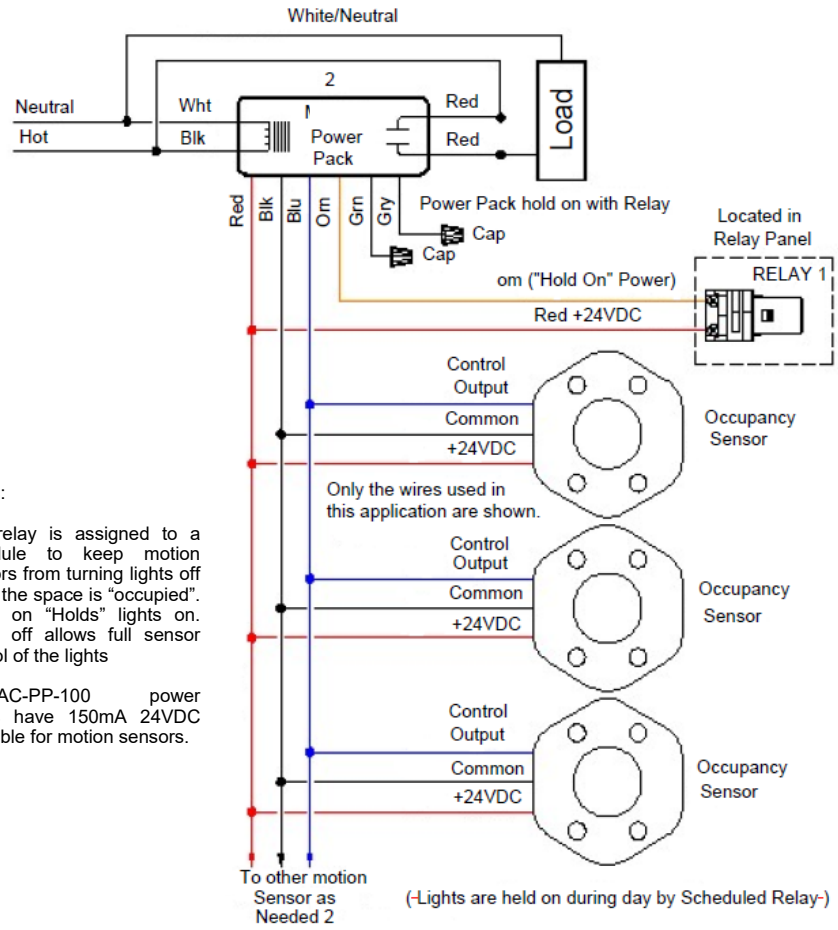

Notes:

The relay is assigned to a schedule to keep motion sensors from turning lights off when the space is "occupied". Relay on "Holds" lights on. Relay off allows full sensor control of the lights

PSC-AC-PP-100 power packs have 150mA 24VDC available for motion sensors.

Additional Notes

Over-current Protection

The PSC-AC-PP-100 has built-in short circuit and thermal protection features that shut down the +24VDC output (low voltage red wire) when the output exceeds 200mA in order to prevent permanent damage to the power pack. Removing the excess load from the output will allow the power pack to resume normal operation.

Relay Zero-crossing Protection

Switching the relay at the zero-crossing point (zero volts AC) reduces sparking at the contacts, extends relay life, and reduces EMI. The PSC-AC-PP-100 will switch at 0VAC ± 20%. DC is without zero-crossing protection.

Installation

The PSC-AC-PP-100 is a Class 2 Output Power Supply, suitable for parallel interconnection of up to 6 sensor units. It is UL Listed for interconnection of Power Sources in accordance with National Electric Code. It is designed to attach to existing or new electrical enclosures.

Most applications require UL listed, 18-22 AWG, 3-conductor, Class 2 cable for low voltage wiring. Low voltage wiring should use at least 22 AWG wire. High voltage wiring should use at least 14 AWG wire.

For plenum return ceilings, use UL listed plenum-approved cables with 1/2" knockouts.

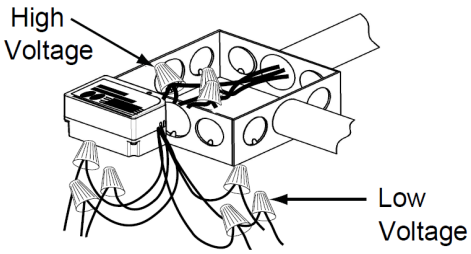

LED Indicator

LED OFF: No power to the PSC-AC-PP-100 or the +24VDC output is shorted.

LED blinking continuously: Flashes once every 2 seconds and is off for 0.5 seconds. The relay is closed and the load is on.

LED normally ON: The relay is open and the load is off.

Optimizing Sensor Placement

The maximum range of the PSC-ID-x-CM series of ceiling mount sensors with 360° coverage is 1200ft² (dia. 40ft) for PIR detection and 1000ft² (dia. 35ft) for ultrasonic detection.

The detection area may be more or less than that depending on mounting height, sensitivity setting, and/or obstacles such as furniture or partitions. Other factors such as proximity to lighting fixtures, windows, doorways, and HVAC ducts, may also affect sensor operation. It is important that these issues be considered when planning how many sensors to use and where to place them.

It is also important to consider what type of motion will be detected: minor motion (e.g., a person sitting at a desk typing on a computer) or major motion (e.g., a person walking around or entering a room).

PIR Sensor Placement

Optimal mounting height is 8-10ft. Mounting outside this range will affect the sensor's detection pattern. As you decrease mounting height, you decrease the sensor range and increase the sensitivity to minor motion. Conversely, when you increase the mounting height, you increase the range and decrease the sensitivity to minor motion. At heights greater than 12-24 ft. you will start to see significantly reduced sensitivity.

In large or open areas, it is best to install multiple sensors so that there is some overlap with each sensor's coverage area (Figure 1). This will help eliminate blind spots. Sensitivity should be set to 100%.

In small or closed areas, avoid placing the sensor where it will have a clear view through an open door, as the sensor may detect people walking by (Figure 2). Sensitivity can be set to 50%, which decreases range by half, but increases sensitivity to minor motion.

As a general rule, especially in areas with partitions such as open offices, each occupant should be able to clearly view the sensor. If the occupant can't see the sensor there is a good chance the sensor can't see the occupant.

PIR sensors should be mounted at least 4-6 ft. away from HVAC ducts as rapid-moving air currents or temperature differences may cause false triggering.

PIR sensors are typically best for detecting major motion for two reasons:

(1) PIR sensors divide the detection area into zones using a Fresnel lens. Major motion will typically trigger an event because occupants cross into multiple zones, whereas minor motion may or may not cross zones.
(2) PIR sensors compare the infrared (heat) energy emitted by moving objects with the background space. An occupant sitting relatively motionless may, after a short while, start to blend into the background.

Ultrasonic Sensor Placement

mwConnect does not currently manufacture a stand-alone ultrasonic sensor; ultrasonic and PIR sensors are integrated into a single sensor unit. This being the case, all of the guidelines for PIR sensor placement are equally applicable here (Figure 3).

Keep in mind, however, ultrasonic and PIR sensors operate on completely different principles. Instead of dividing the room into zones and *passively* looking at infrared (heat) energy, ultrasonic sensors *actively* emit high frequency sound waves (32KHz) and rely on the Doppler Effect to detect motion. Simply put, ultrasonic sensors analyze the frequency shift between the emitted and reflected sound waves. A motion event changes the frequency of the sound waves and triggers the sensor.

One detection method is not absolutely superior to or preferable to another, but each sensor type will perform better in different applications. Ultrasonic detection is included in the dual tech sensor as a supplement, to avoid false triggering, in those applications where PIR is inadequate.

Ultrasonic technology can supplement PIR sensors in three ways:

(1) Ultrasonic sensors can "see" around obstacles that would normally block PIR sensors.
(2) Ultrasonic sensors are not affected by temperature. So, in areas with limited air flow or in situations where occupants start to blend into the background, the sensor's accuracy is greatly improved.
(3) Ultrasonic sensors are better at detecting minor motion than PIR since they do not need to divide the room into zones.

Mounting Options

- Sensor mounted to wallboard or drop ceiling using screws
- Sensor mounted to octagonal J-box installed flush to wallboard ceiling
- Power pack installed above ceiling attached to J-box

See "Installation Instructions" for more information.

Low Voltage Power Pack Placement

The PSC-AC-PP-100 is a Class 2 Output Power Supply, suitable for parallel interconnection of up to 6 sensor units. It is UL Listed for interconnection of Power Sources in accordance with National Electric Code. It is designed to attach to existing or new electrical enclosures.

Most applications require UL listed, 18-22 AWG, 3-conductor, Class 2 cable for low voltage wiring. Low voltage wiring should use at least 22 AWG wire. High voltage wiring should use at least 14 AWG wire.

For plenum return ceilings, use UL listed plenum-approved cables with 1/2" knockouts.

Figure 1: Open Office PIR Sensor

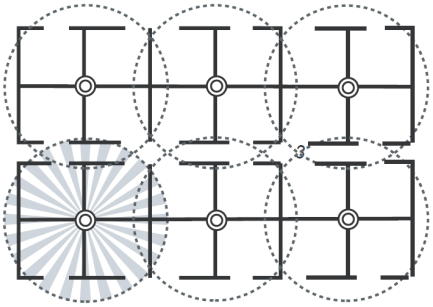

Figure 2: Private Office

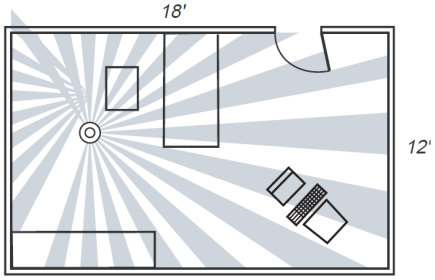
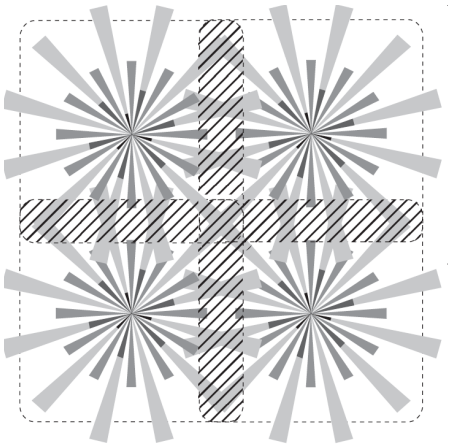
Figure 3: Open Office Dual Tech Sensor